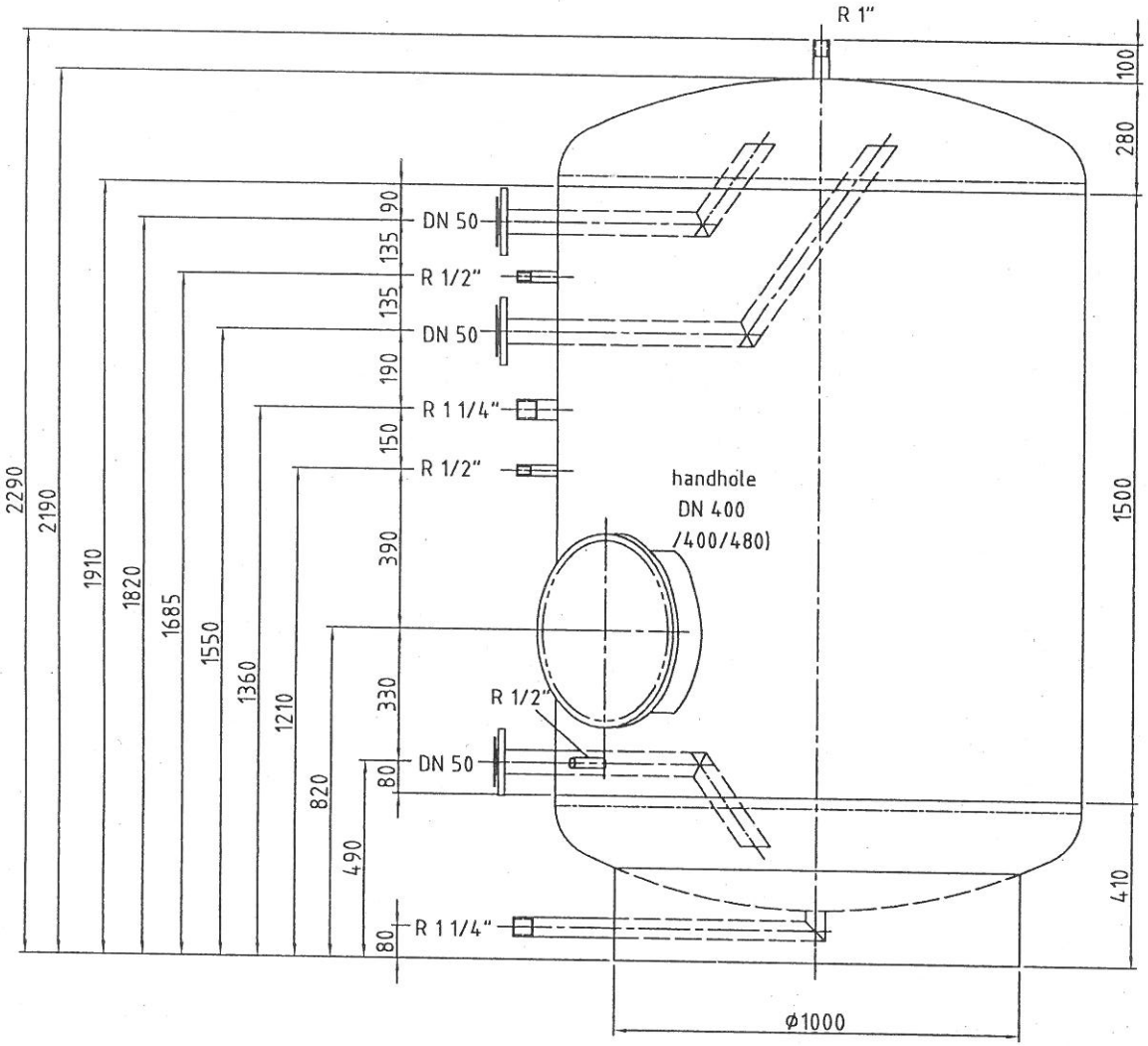

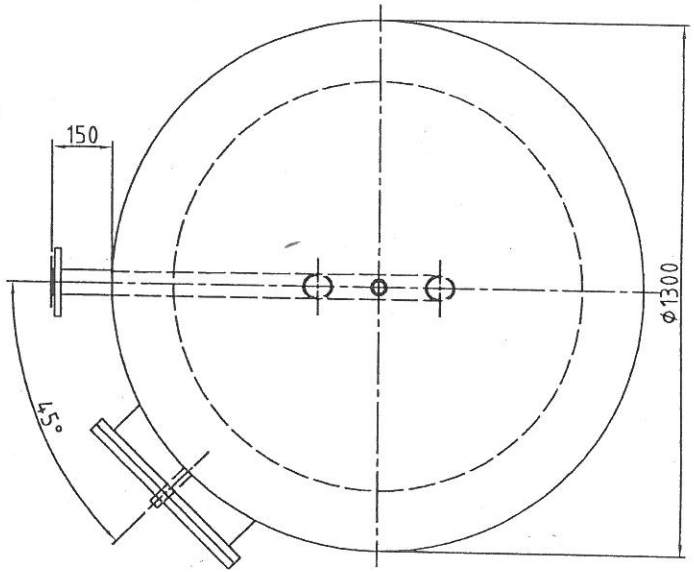

-all connections a length of 100 mm
-flange-connections executed as alumimnium lap joint flange
-tank completely dip-pickled and passivated
-material: 1.4571(316 Ti)
-max.working pressure: 10 bar
-max.operating temperature: 95°C

					Oberfläche	Maßstab 1:12.5	Position – Menge –
						–	1.4571
						–	–
				Datum	Name	hot water tank	
				Bearb. 23.04.2003		Typ RET 2500-volume 2500 l	
				Gepr. 24.04.2003			
				Norm			
						10067-0	Blatt 1 Bl
Zust.	Änderung	Datum	Name	EDV Nr. 10067-0			