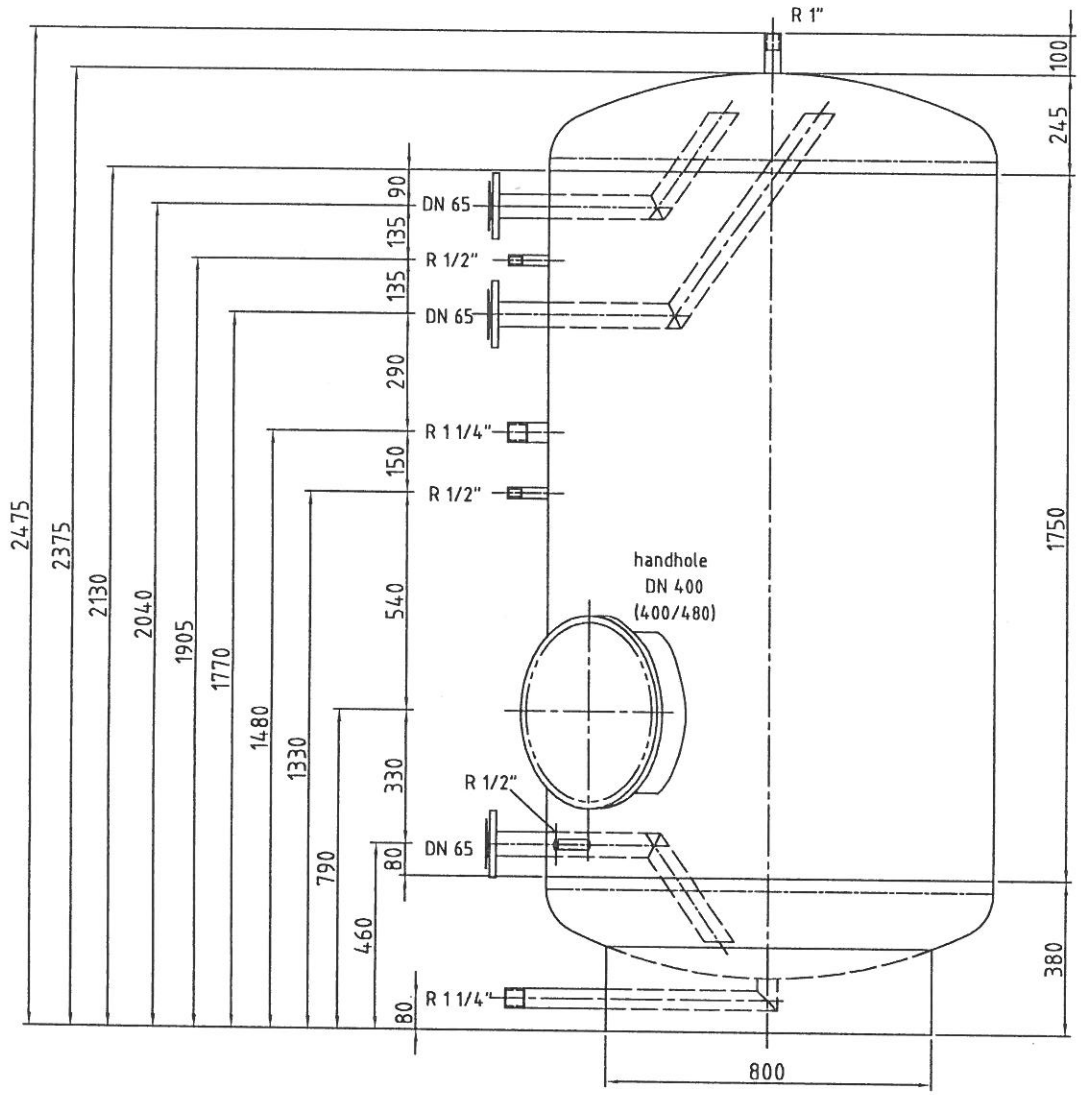


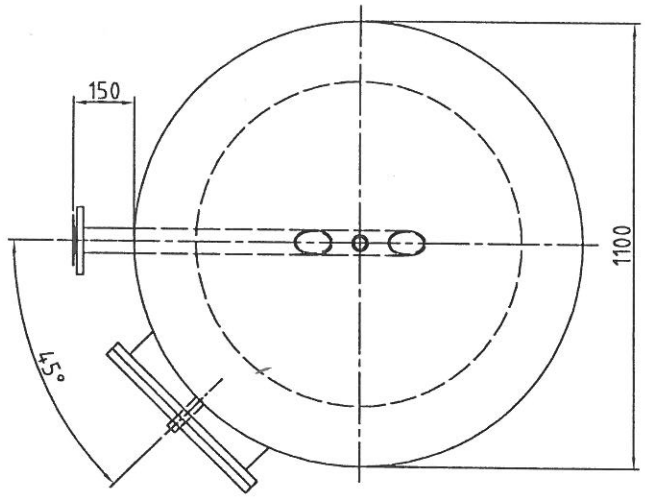


- all connections a length of 100 mm
- flange-connections executed as alumimnium lap joint flange
- tank completely dip-pickled and passivated
- material: 1.4571(316 Ti)
- max.working pressure: 10 bar
- max.operating temperature: 95°C

| | | | | | | | |
|---|---|---|---|---|---|---|---|
| | | | | | Oberfläche | Maßstab 1:12.5 | Position – Menge – |
| | | | | | | – 1.4571 | |
| | | | | Datum | Name | hot water tank | |
| | | | | Bearb. 24.04.2003 | | TYP RET 2000-volume 2000 l | |
| | | | | Gepr. 24.04.2003 | | | |
| | | | | Norm | | | |
| | | | | | | 10066-0 | Blatt 1 |
| Zust. | Änderung | Datum | Name | EDV Nr. 10066-0 | | | Bl |