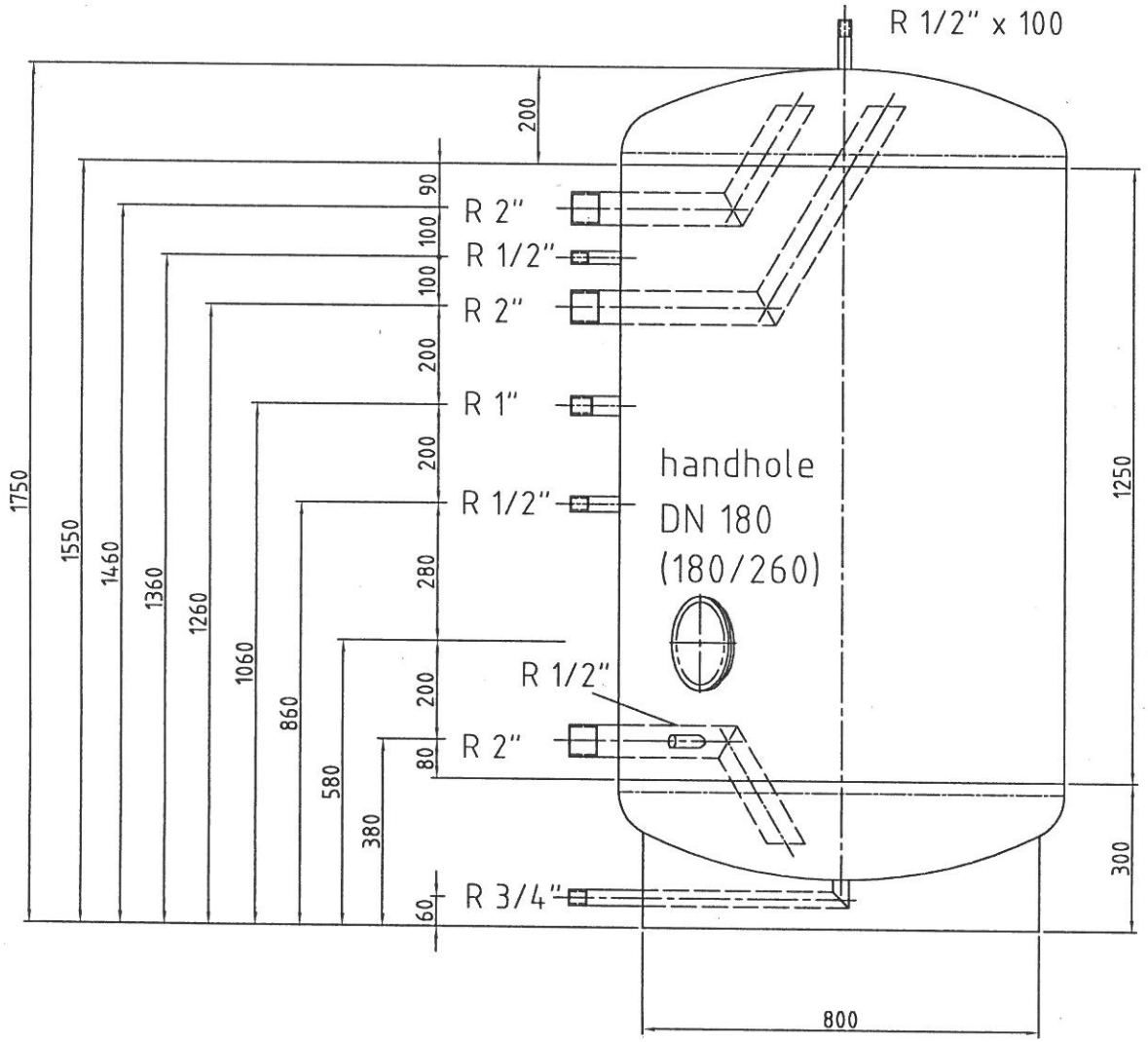

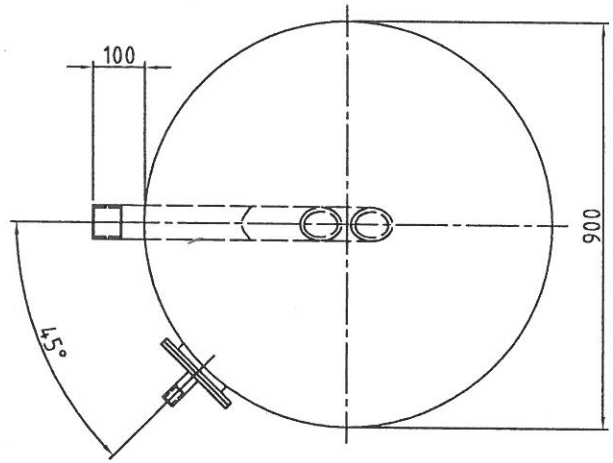

- all connections a length of 100 mm
- tank completely dip-pickled and passivated
- material: 1.4571(316 Ti)
- max.working pressure: 10 bar
- max.operating temperature: 95°C

					Oberfläche	Maßstab 1:10	Position – Menge –
						– 1.4571 –	
				Datum	Name	hot water tank	
				Bearb. 24.04.2003		Typ RET 1000 - volume 1000 l	
				Gepr. 24.04.2003			
				Norm			
						10064-0	Blatt 1
Zust.	Änderung	Datum	Name	EDV Nr. 10064-0			Bl