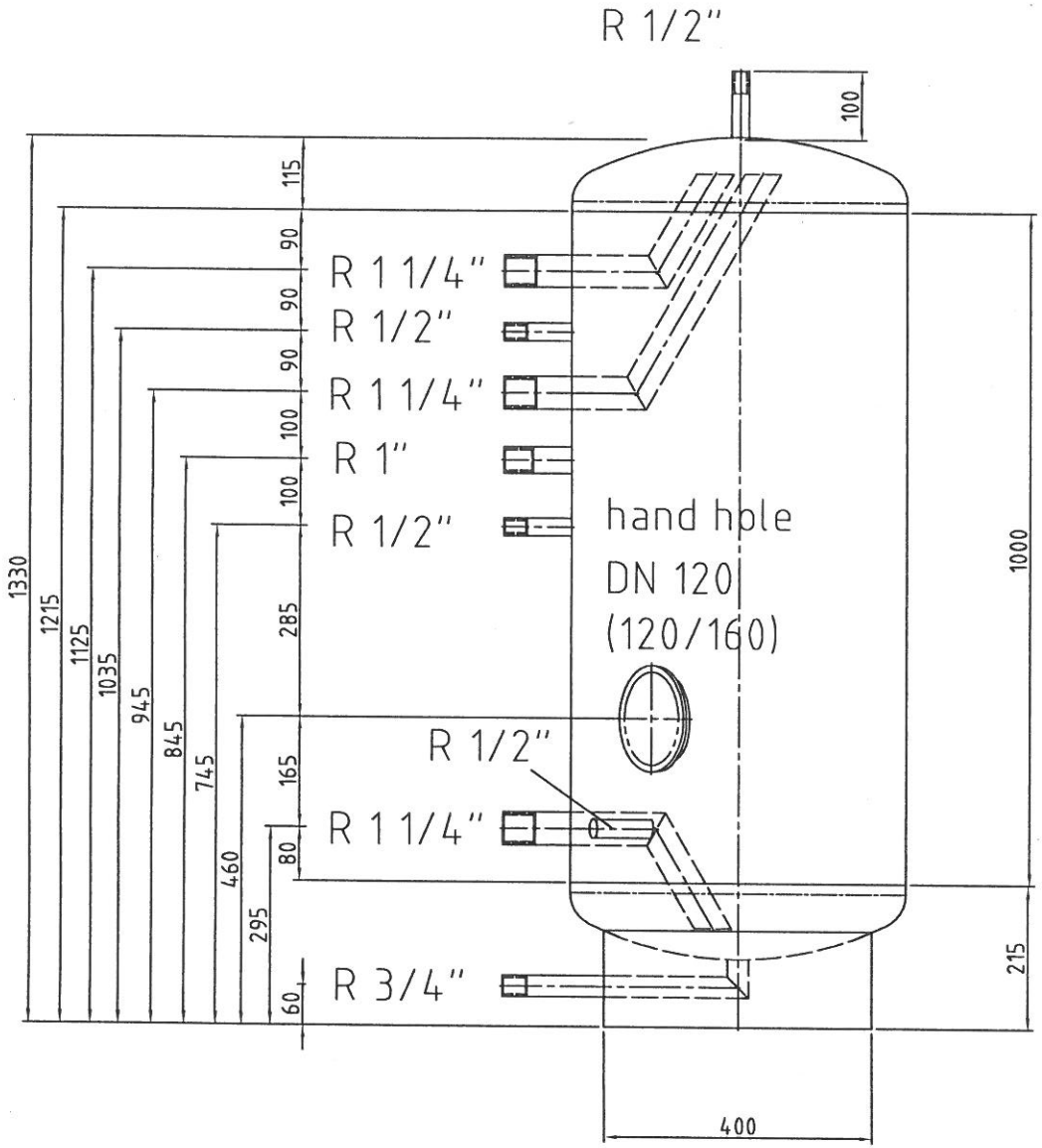

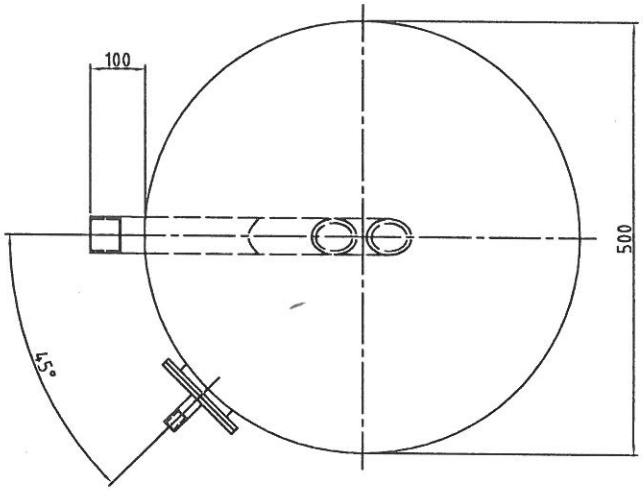

-all connections a length of 100 mm
-tank completely dip-pickled and passivated
-material: 1.4571(316 Ti)
-max.working pressure: 10 bar
-max.operating temperature: 95°C

Maßstab 1:7.5						Position –	Menge –
-						1.4571	
-						-	
				Datum	Name	hot water tank	
				Bearb. 24.04.2003		Typ RET 200 - volume 200 l	
				Gepr. 24.04.2003			
				Norm			
						10050-0	Blatt 1 Bl
Zust.	Änderung	Datum	Name	EDV Nr. 10050-0			