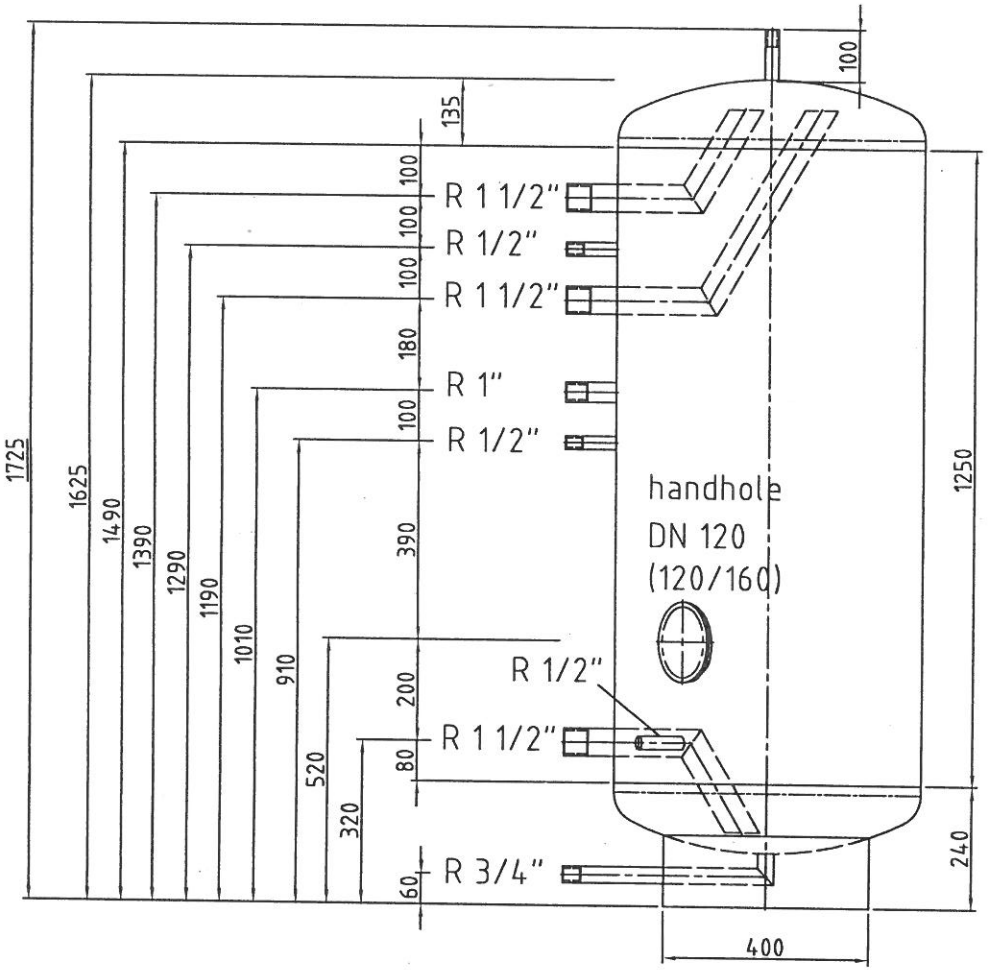


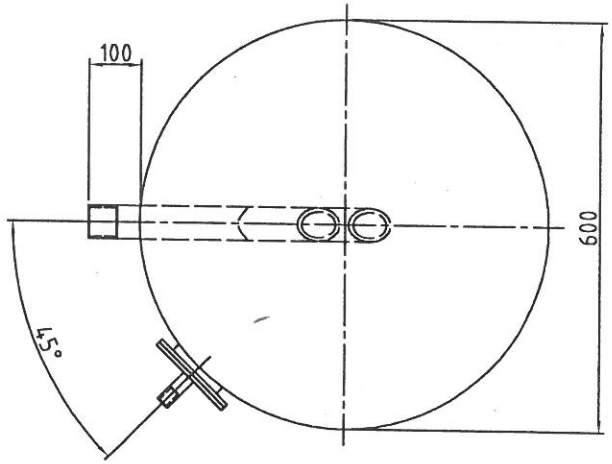


- all connections a length of 100 mm
- tank completely dip-pickled and passivated
- material: 1.4571(316 Ti)
- max.working pressure: 10 bar
- max.operating temperature: 95°C

| | | | | | | | |
|---|---|---|---|---|---|---|---|
| | | | | | | Maßstab 1:10 | Position – Menge – |
| | | | | | | – | 1.4571 |
| | | | | Datum | Name | | |
| | | | | Bearb. 24.04.2003 | | hot water tank | |
| | | | | Gepr. 24.04.2003 | | Typ RET 400 - volume 400 l | |
| | | | | Norm | | | |
| | | | | | | 10057-0 | Blatt – |
| Zust. | Änderung | Datum | Name | EDV Nr. 10057-0 | | | Bl |